2145 Indian Road, West Palm Beach, FL 33409
Phone: 561.616.9003 www.beeaccess.com

SPEC-934162

ALUMINUM WALK THRU PORCH BRACKET

DESCRIPTION

The Aluminum Walk-Thru Porch Bracket is the solution for accessing hard to reach recesses on a building's facade with porch lengths up to 2 meters. Built as a single, integrated assembly, it provides completely unobstructed access across the full work platform, allowing workers to move freely and efficiently without interference. Its compact, foldable design simplifies storage and transportation, eliminating the need for disassembly or handling loose components. With tool-free installation, setup is quick and intuitive, reducing downtime on the jobsite. Each bracket includes a built-in receiver for installing a Counterweight Bar (part # 920160) when additional stability is required.

SPECIFICATIONS

Part No.: 934162 (Set of 2)

Load Capacity:
Single Porch: 250 lb per porch section
Multiple Porches: 500 lb across all porches on platform

Dimensions (HxWxD):
Deployed: 29.6” x 36.3” x 4.5”
Collapsed: 14.25” x 36.3” x 4.5”

Weight: 23 lb

Construction: Aluminum w/ steel Toeboard Bracket and Hinge Weldment

Compatibility: All UP-STAGE & Altrex platforms

Accessories:
USEGRHP: End Guard Rail, Hinging Porch
USAGRP-K: Adjustable Guard Rail Post Set
920160: Counterweight Bar

© 2026 Bee Access Products All Rights Reserved.

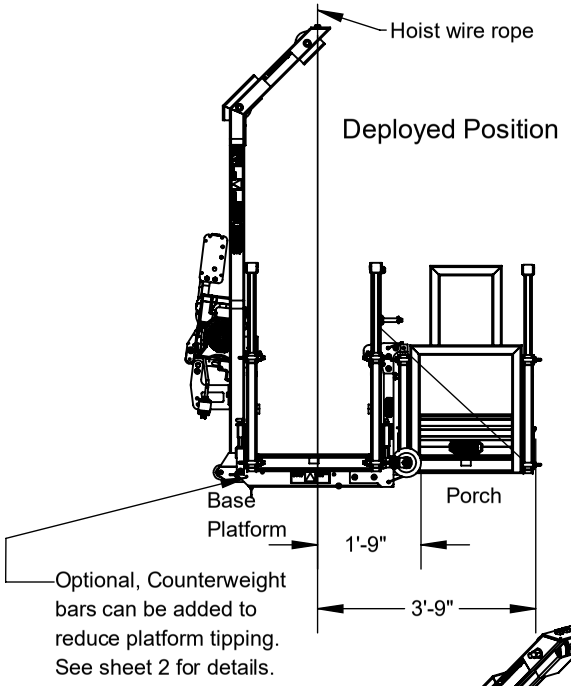

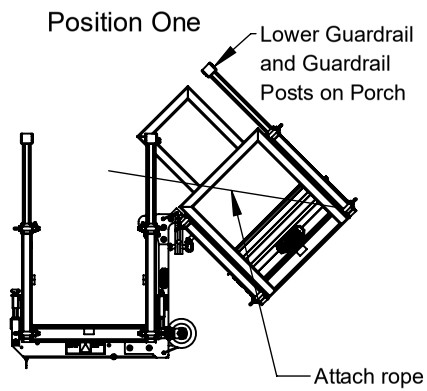

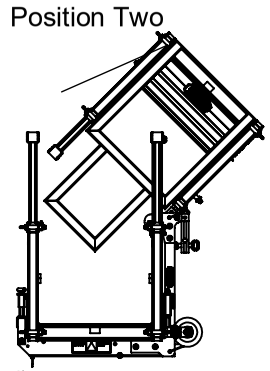

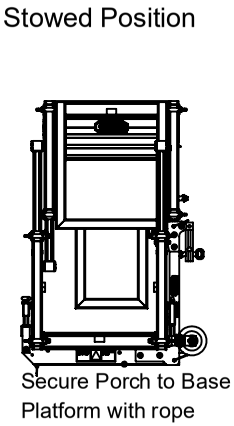

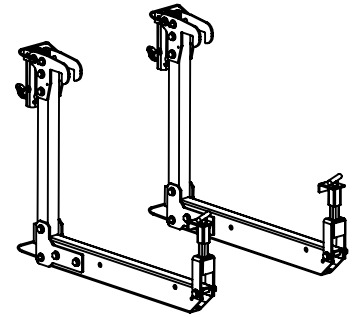

#934162: Hinging Porch Bracket Set (includes items in this view only)

NOTE:
Bracket may also be used as a standard Porch Bracket Set

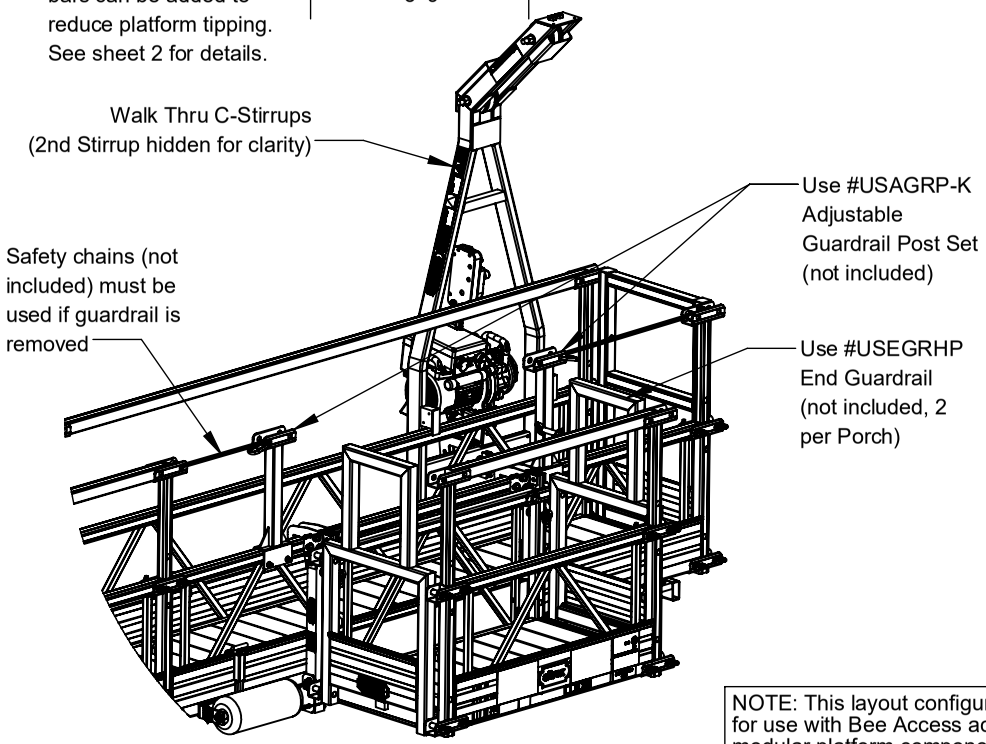

Notes:
250 lb Maximum Load Capacity per Porch

When using multiple Porches, 500 lb Maximum Load Capacity TOTAL across all Porches

When using Bracket in a hinging application, the max single Porch length is 2m

For alternate configurations contact Bee Access Products

WARNING: Total Porch length to be no more than 1/3 the Base Platform length. For alternate configurations contact Bee Access Products

Porch length (m)	Porch self weight (lb)
0.5	84
1.0	115
1.5	128
1.5 (1.0m + 0.5)	159
2.0	148

BEFORE USE: Raise platform 1-2ft and walk around platform. If the platform is unstable, Counterweights may be required. Contact Bee Access Products for verification before use

NOTE: This layout configuration is designed and approved ONLY for use with Bee Access accessories on ALTREX or UP-STAGE modular platform components. If any other components are used, Bee Access is not responsible for the platform's integrity and will take no liability for any platform failure.

WARNING: Platforms must be raised and lowered evenly to prevent crack or torn welds or other failure. Failure to do so may result in injury or death.

The information contained in this drawing is the sole property of Bee Access Products. Any reproduction in part or whole without the written permission of Bee Access Products is strictly prohibited.

Scale	Do not scale drawing.	Weight:
1:40		LBS

Approvals	By:	Date:
Drawn	ZCN	01-10-25

Aluminum Porch Bracket Set, Walk-Thru Application

Product Line/Project: **Platform**

REV. E

Part No. 934162 App

Sheet 1 of 2