2145 Indian Road, West Palm Beach, FL 33409
Phone: 561.616.9003 www.beeaccess.com

ALUMINUM WALK-THRU PORCH BRACKET

OPERATOR'S MANUAL

DESCRIPTION

The Aluminum Walk-Thru Porch Bracket is the solution for accessing hard to reach recesses on a building's facade with porch lengths up to 2 meters. Built as a single, integrated assembly, it provides completely unobstructed access across the full work platform, allowing workers to move freely and efficiently without interference. Its compact, foldable design simplifies storage and transportation, eliminating the need for disassembly or handling loose components. With tool-free installation, setup is quick and intuitive, reducing downtime on the jobsite. Each bracket includes a built-in receiver for installing a Longhorn Bar (part # 920160) when additional stability is required.

SPECIFICATIONS

Part No.: 934162 (Set of 2)

Load Capacity:
Single Porch: 250 lb per porch section
Multiple Porches: 500 lb across all porches on platform

Dimensions (HxWxD):
Deployed: 29.6” x 36.3” x 4.5”
Collapsed: 14.25” x 36.3” x 4.5”

Weight: 23 lb

Construction: Aluminum w/ steel Toeboard Bracket and Hinge Weldment

Compatibility: All UP-STAGE & Altrex platforms

Accessories:
USEGRHP: End Guard Rail, Hinging Porch
USAGRP-K: Adjustable Guard Rail Post Set
920160: Longhorn Bar
934178-03: Counterweight Bar

© 2026 Bee Access, LLC All Rights Reserved. Manual must be complete and read in its entirety.

ALUMINUM WALK-THRU PORCH BRACKET

TABLE OF CONTENTS

	Page
Description and Specifications	1
Table of Contents	2
General Warning	3
Parts List & Dimensions	4
Assembly	5
Assembly & Installation Instructions	6-7
Operating Instructions	8
General Operating Instructions	9
Pre-Operation Check List	10
Labels	11
Optional Accessories	12
Aluminum Porch Bracket Application Drawings	13-14

© 2026 Bee Access, LLC All Rights Reserved. Manual must be complete and read in its entirety.

⚠ GENERAL WARNING - READ FIRST ⚠

Safety is a matter of life or death for riggers, operators and by-standers. This warning is your share of duties for achieving safety.

Your duty to understand and comply:

1. It is imperative for safety and efficiency of operations that this manual be read and fully understood by the rigger and the operator before rigging and using this equipment. All instructions contained herein must be carefully and strictly followed, including applicable Bee Access guidelines.
2. Should you hand over this equipment under any conditions, to any party operating out of your control, you must attach a clean copy of this manual and draw to other party's attention that strictly following all the instructions therein is a matter of life or death.
3. Before using this equipment, the rigger and the operator must become aware of all requirements of federal, state, provincial and local safety regulations, applicable to the entire suspended scaffold system and any component of it.
4. Never load this equipment above its rated load capacity.
5. Bee Access declines any responsibility for any special layouts, rigging or structural combinations beyond the descriptions of this manual.
6. Bee Access declines any responsibility for any other use of this equipment, than described in this manual.

Your duty to inspect and maintain:

7. Keep this manual available at all times for easy reference whenever required. Extra copies are available from Bee Access and/or your equipment supplier.
8. Carefully take notice of all labels affixed to the equipment. Never rig or operate this equipment if any label, normally fixed on it is obscured or missing. Replacement labels are available from Bee Access and/or your equipment supplier.
9. Every time the suspended scaffold is to be rigged or used, check that the Tieback Anchor, rigging, hoists, platform and other components are complete and in good working condition, prior to proceeding. All wire ropes and safety lines and their protective sleeves should be inspected at the beginning of every shift. Check for wear and abrasion due to contact with rigging equipment and/or the building structure.
10. **Daily inspection before use is to be carried out by a competent person.** Thoroughly check overall condition for bent, damaged or worn parts and broken welds. A signed and dated inspection record should be maintained for these purposes.
11. Make sure to comply with inspection and maintenance guidelines of all other components used in the suspended scaffold system.
12. Bee Access declines any responsibility for consequences of repairs or modifications brought out of its control to the product, specifically by replacement of original parts or repairs by another manufacturer.

Your duty to train and control people:

Compliance with safety rules extends to rigging operations which must be carried out only after securing safe conditions of operation as per safety regulations and requirements.

13. An operator must not be assigned to rigging, de-rigging, moving or operating a suspended scaffold if that person is not:
    a. Mentally and physically fit for the purpose, especially at heights
    b. Competent for the job to be performed
    c. Familiar with the scaffold equipment as rigged
    d. Professionally trained for working under the above requirements
14. Never let the equipment be moved or operated by unauthorized personnel. Keep the equipment, either rigged or unrigged, out of reach of unauthorized persons, while out of operation.
15. Every suspended job must be placed under the control of a person having the required competence and authority for checking that all the instructions prescribed by this manual be regularly and efficiently carried out.

Your duty to safety of the entire scaffold system:

A suspended scaffold system is made up of numerous pieces of equipment; all of these components can contribute to the required safety only if:

16. Other components meet the requirements of the applicable safety regulations and requirements, are of the proper quality, assembled to form a safe and efficient suspended system and compatibility is approved by Bee Access.
17. The supporting structure and tie-backs can withstand every load to be applied, either static or dynamic, during rigging or operating of the suspended scaffold equipment.
18. All the requirements in strength and resistance are obtained with the necessary safety coefficients (call your supplier for regulations and professional standards).
19. All the calculations, design and subsequent work necessary to meet the above requirements have been made by a competent person on the basis of proper technical information regarding the site.

NOTE: This manual is neither a regulations compliance manual nor a general training guide on suspended scaffold operations. You must refer to proper instructions delivered by your supplier of the other pieces of equipment included in your suspended scaffold installation. Whenever calculations and specific rigging and handling are involved, the operator should be professionally trained to that end and secure relevant information prior to commencing such work.

Read and comply with the "Code of Safe Practices for Suspended Powered Scaffolds" issued by the Scaffold Industry Association (also available from Bee Access or your supplier).

© 2026 Bee Access, LLC All Rights Reserved.

2145 Indian Road, West Palm Beach, FL 33409
Phone: 561.616.9003 www.beeaccess.com

ALUMINUM WALK-THRU PORCH BRACKET

PARTS LIST & DIMENSIONS

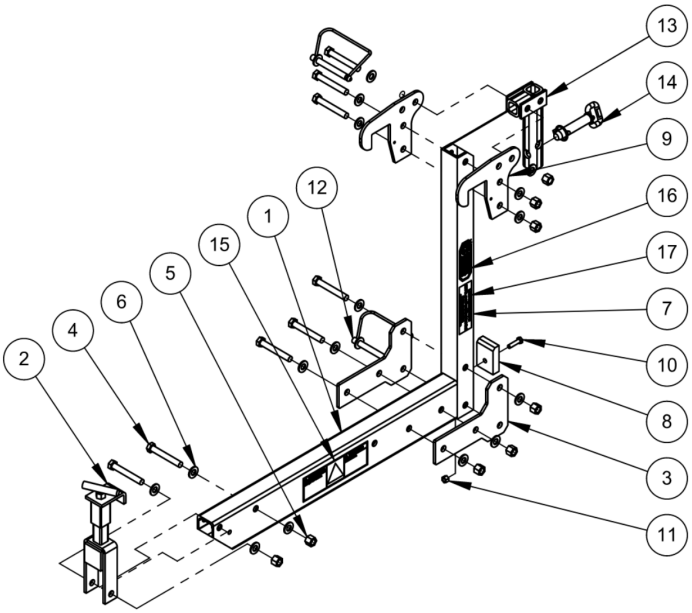

Item	Qty.	Part No.	Description
1	2	934162-24	Horizontal Tube
2	2	934150-07	Toeboard Bracket
3	4	934162-22	Corner Plate
4	16	110253-5	Bolt 1/2"-13 x 3.5"
5	16	110352	Nut, Lock 1/2"-13
6	32	110451	Washer, 1/2" Flat
7	2	934162-21	Vertical Tube
8	2	334109-14	Bottom Bracket Pad
9	4	934162-23	Midrail Hook
10	2	110221-2	Bolt 5/16"-18 x 1.25"
11	2	110322	Nut, Lock 5/16"-18
12	4	110112	Hitch Pin, 1/2" x 3.5"
13	2	934162-01	Hinge Weldment
14	2	424001	Quick Pin
15	2	WL-FALL	Warning Label, Fall Hazard
16	2	LB-LOGO15	Label, Bee Logo-1.5"
17	2	LB-PB	Label, PB Capacity
18	1	WRI116-SC77-CC	1/16" Ø Steel Wire Rope Tether
19	2	HWZPCDS-1_16	1/16" Swage Sleeve

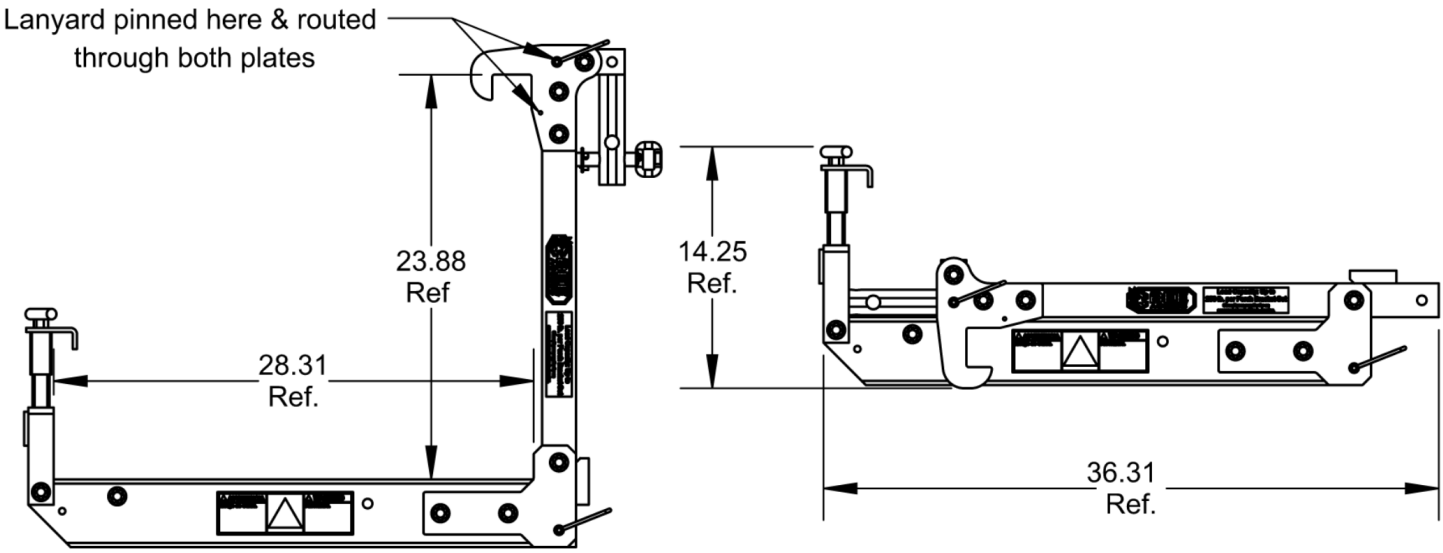

Spare parts used for all equipment must be in accordance with the product, no substitutions are allowed.

© 2026 Bee Access, LLC All Rights Reserved. Manual must be complete and read in its entirety.

ALUMINUM WALK-THRU PORCH BRACKET

ASSEMBLY

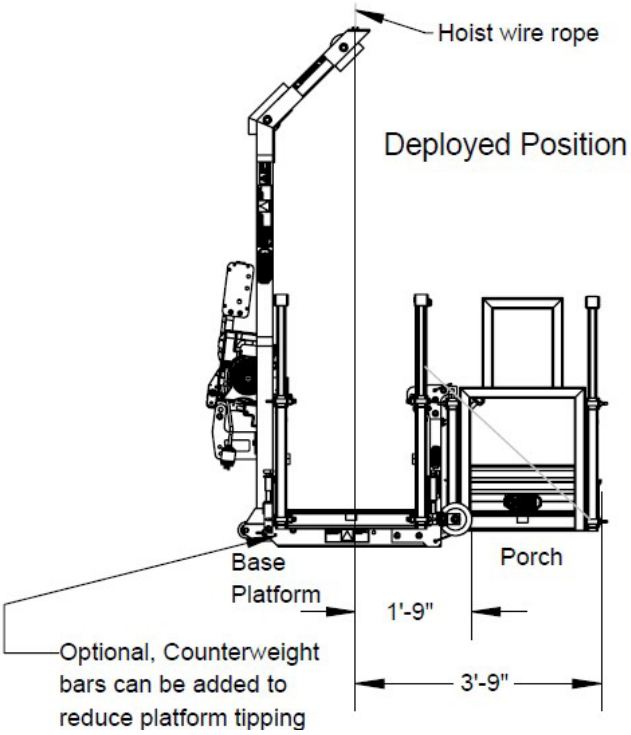

250 lb Maximum Load Capacity per platform section installed between Porch Brackets

500 lb Maximum Load Capacity TOTAL when using multiple Porch Bracket assemblies on the same base platform

WARNING: Total Porch length to be no more than 1/3 the Base Platform length. For alternative configuration contact Bee Access.

Porch length (m)	Porch self weight (lb)
0.5	84
1.0	115
1.5	128
1.5 (1.0m + 0.5)	159
2.0	148

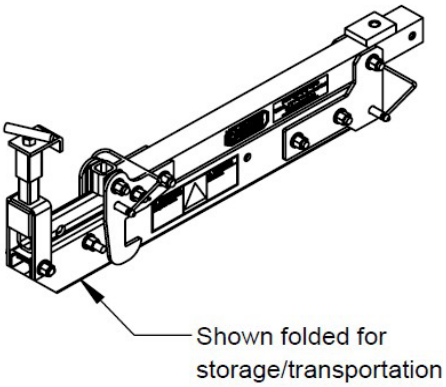

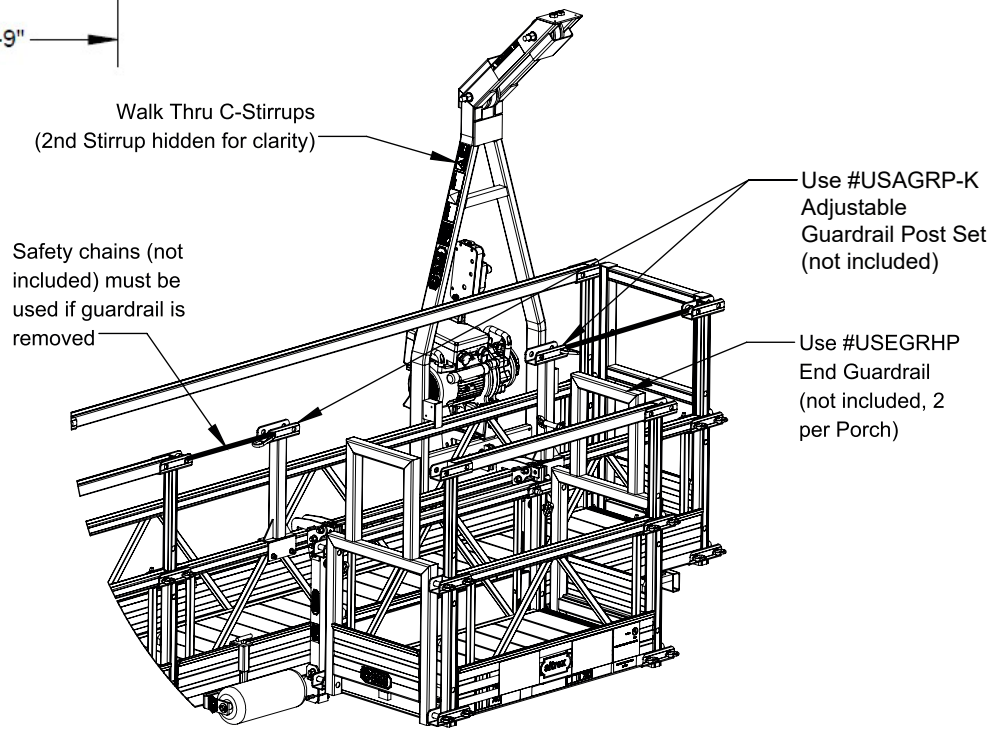

⚠ WARNING

Any assembly of this equipment other than in strict accordance with these instructions shall be at the Operator's risk and may result in death or serious injury.

© 2026 Bee Access, LLC All Rights Reserved.

2145 Indian Road, West Palm Beach, FL 33409
Phone: 561.616.9003 www.beeaccess.com

ALUMINUM WALK-THRU PORCH BRACKET

ASSEMBLY & INSTALLATION INSTRUCTIONS

Mounting Porch Bracket to Platform

STEP 1

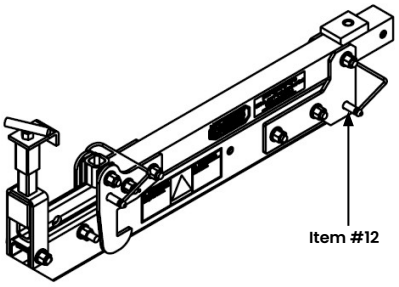

STEP 2

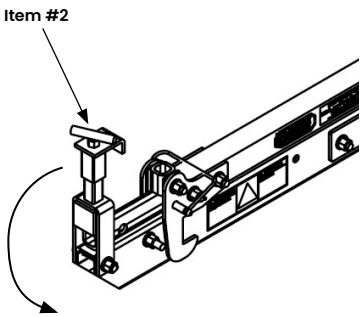

STEP 3

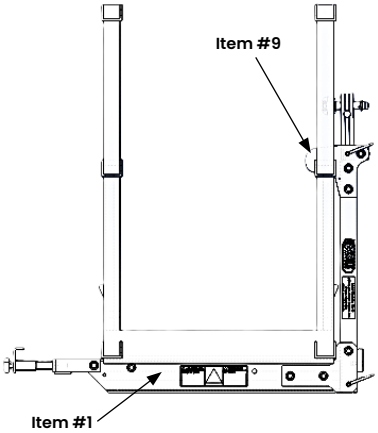

STEP 4

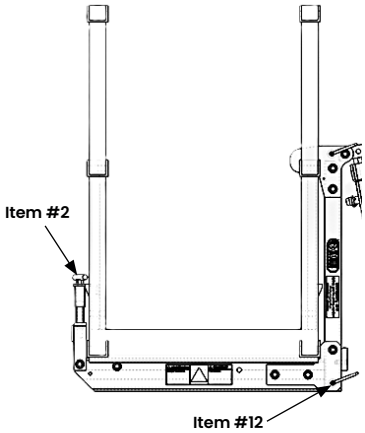

NOTE

Assembly and operation must be performed or supervised by a trained and competent person. Read and fully understand these instructions before proceeding with assembly/installation. Inspect all nuts to make sure they are functional and properly secured before every use. Fasten all bolts snug-tight (1/3 to 1/2 turn past pretensioning) unless otherwise specified. Make sure warning/rating labels are in place, legible and have been read.

Assembly & Installation Instructions

1. If the Porch Bracket is in the folded position, remove the 1/2"x3.5" Hitch Pin (Item #12) at the lower pivot point.
2. Loosen the Toeboard Bracket T-handle (Item #2) and fold it outward.
3. Unfold the Porch Bracket. With the Porch Bracket open, position it in the desired location on the base platform by hanging the Midrail Hooks (Item #9) on the midrail while sliding the Horizontal Tube (Item #1) underneath the base platform.
4. Reinstall the 1/2"x3.5" Hitch Pin (Item #12) that was removed in step 1 and raise the Toeboard Bracket (Item #2) so that it can clamp to the top of the side frame toeboard on the rear of the base platform. Do not tighten the T-handle so that the Porch Bracket's position can be adjusted when installing the platform section.

⚠ WARNING

- It is the user's responsibility to read and understand the warnings listed on this page and to use the equipment with these warnings in mind.
- Any installation/use of this equipment other than in strict accordance with these instructions shall be at the operator's risk and may result in death or serious injury.
- It is the user's responsibility to ensure that the distance between rigging points is equal to the distance between the hoist suspension points.
- Make sure the warning labels are present and legible.
- Do not alter the product and never use it for purposes in which it was not intended.
- Use only Bee Access provided hardware. Do not substitute.
- Inspect all equipment before use.
- Never use damaged equipment.
- Torque hardware to manufacturer's specifications.

© 2026 Bee Access, LLC All Rights Reserved.

ALUMINUM WALK-THRU PORCH BRACKET

ASSEMBLY & INSTALLATION INSTRUCTIONS
Mounting Porch Bracket to Platform *(continued)*

STEP 5

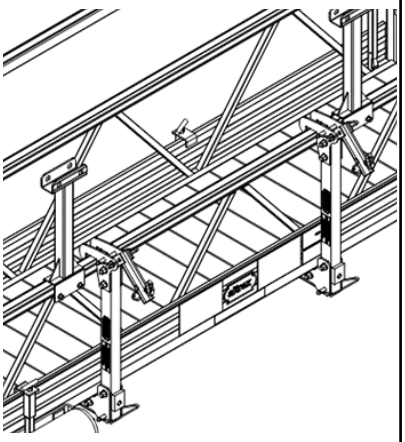

STEP 6

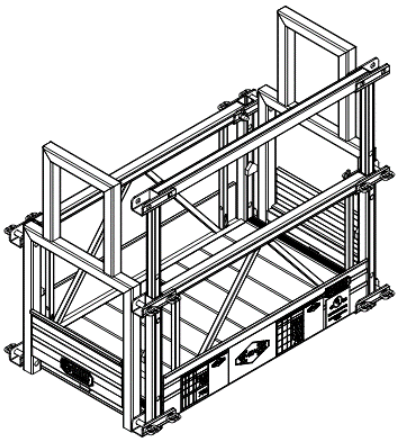

STEP 7

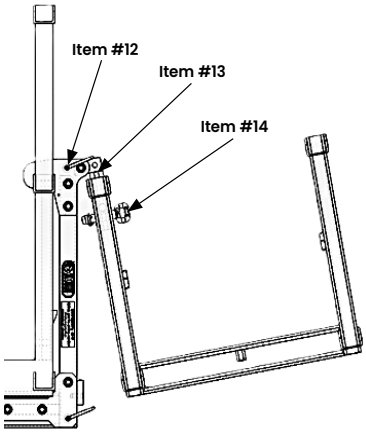

STEP 8

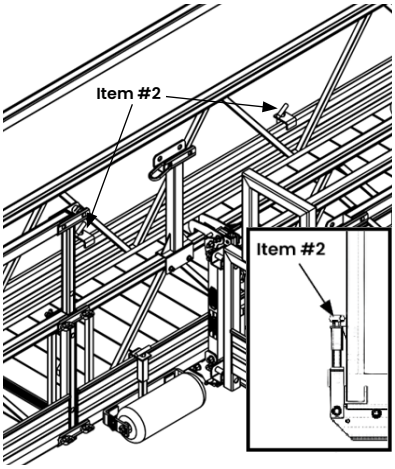

⚠ WARNING

- It is the user's responsibility to read and understand the warnings listed on this page and to use the equipment with these warnings in mind.
- Any installation/use of this equipment other than in strict accordance with these instructions shall be at the operator's risk and may result in death or serious injury.
- It is the user's responsibility to ensure that the distance between rigging points is equal to the distance between the hoist suspension points.
- Make sure the warning labels are present and legible.
- Do not alter the product and never use it for purposes in which it was not intended.
- Use only Bee Access provided hardware. Do not substitute.
- Inspect all equipment before use.
- Never use damaged equipment.
- Torque hardware to manufacturer's specifications.

Assembly & Installation Instructions (continued)

5. Follow steps 1 to 4 to install the second Porch Bracket adjacent to the one that is already installed according to the required length of platform section (Maximum 2M) that will be installed between them. The total length of the Porch Bracket platform section(s) must not exceed 1/3 of the base platform length (unless approved by Bee Access).
6. Assemble the porch platform section components. End Guardrails (USEGRHP) may be installed now or after the platform section is attached to the Porch Brackets.
7. Remove the 1/2"x3.5" Hitch Pins (Item #12) that are installed to the Midrail Hooks (Item #9) at the top of the Porch Brackets and rotate the Hinge Weldments (Item #13) outward. Insert it into the top of both platform section U-Frames and then install the Quick Pins (Item #14) to secure the Hinge Weldments to the U-Frames. Reinstall the 1/2"x3.5" Hitch Pins (Item #12) in the same location that it was removed from.
8. Hand tighten the Toeboard Bracket T-handles (Item #2) on both Porch Brackets. Do NOT over tighten.
9. With the Porch Bracket in the deployed position, raise the platform 1-2 ft and check the stability. If the platform is tilting forward more than 15° degrees along the axis of the platform with load on the Porch Bracket platform section(s), counterweights or a different configuration may be required to stabilize the platform. Refer to pages 12-15 for information on counterweight support accessories.
10. Using the Pre-Operation Checklist on page 10, inspect the Porch Bracket section(s) to ensure everything is installed correctly and free of damage or missing parts.

© 2026 Bee Access, LLC All Rights Reserved. Manual must be complete and read in its entirety.

2145 Indian Road, West Palm Beach, FL 33409
Phone: 561.616.9003 www.beeaccess.com

ALUMINUM WALK-THRU PORCH BRACKET

OPERATING INSTRUCTIONS

Raising & Lowering Porch Bracket Section

STEP 1

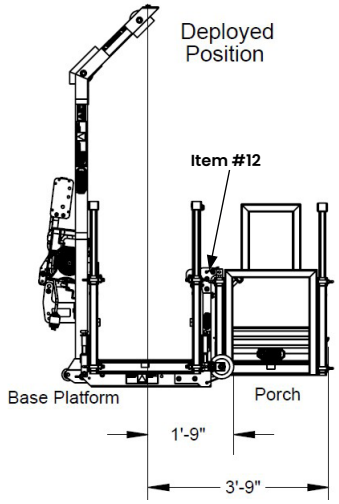

STEP 2

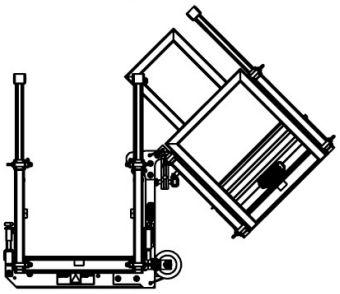

STEP 3

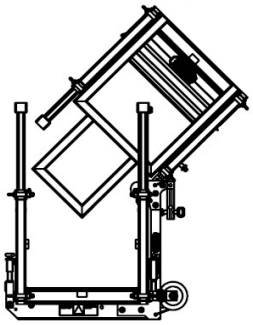

STEP 4

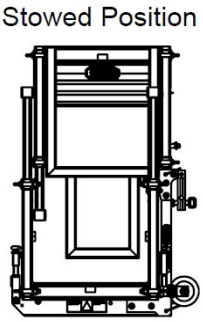

Operating Instructions

1. Once the Porch Bracket platform section(s) are installed to the base platform, it will be in the Deployed Position. Before rotating it into the base platform, remove the 1/2"x3.5" Hitch Pins (Item #12) from both Porch Bracket Midrail Hooks.
2. Remove the adjacent guardrail on the base platform and lower the guardrail and guardrail posts on the outside of the Porch Bracket platform section to the lower position and rotate it upwards and towards the base platform. Attach ropes to the Porch Brackets on each end to help raise it.
3. Continue rotating the Porch Bracket platform section inward to the base platform.
4. Lower the Porch Bracket platform section until it is upside down inside the base platform in the Stowed Position and then secure it using ropes or by reinserting the 1/2"x3.5" Hitch Pins (Item #12) on both Porch Brackets.
5. Raise or lower the base platform to the required elevation and then follow steps 1-4 in reverse order to put the Porch Bracket platform section(s) back into the Deployed Position.

⚠ WARNING

- It is the user's responsibility to read and understand the warnings listed on this page and to use the equipment with these warnings in mind.
- Any installation/use of this equipment other than in strict accordance with these instructions shall be at the operator's risk and may result in death or serious injury.
- It is the user's responsibility to ensure that the distance between rigging points is equal to the distance between the hoist suspension points.
- Make sure the warning labels are present and legible.
- Do not alter the product and never use it for purposes in which it was not intended.
- Use only Bee Access provided hardware. Do not substitute.
- Inspect all equipment before use.
- Never use damaged equipment.
- Torque hardware to manufacturer's specifications.

© 2026 Bee Access, LLC All Rights Reserved.

ALUMINUM WALK-THRU PORCH BRACKET

GENERAL OPERATING INSTRUCTIONS

NOTE

- All pictures and drawings in this manual are for illustrative purposes only.
- This manual is intended for general information only. Because of the many variables which affect the performance of this equipment, some of the information in this manual may not apply. For specific applications, contact Bee Access.
- Erection, use, maintenance, and disassembly must conform to current Bee Access instructions as well as ALL federal, state, provincial, and local regulations.

⚠ WARNING

- It is the user's responsibility to read and understand the warnings listed on this page and to use the equipment with these warnings in mind.
- Any installation/use of this equipment other than in strict accordance with these instructions shall be at the operator's risk and may result in death or serious injury.
- It is the user's responsibility to ensure that the distance between rigging points is equal to the distance between the hoist suspension points.
- Make sure the warning labels are present and legible.
- Do not alter the product and never use it for purposes in which it was not intended.
- Use only Bee Access provided hardware. Do not substitute.
- Inspect all equipment before use.
- Never use damaged equipment.
- Torque hardware to manufacturer's specifications.

Operation Instructions

1. Perform the pre-operation inspection using the Pre-Operation Checklist on page 10. After the inspection is completed, commence using the platform.

Warnings

1. Never overload the hoist, platform, stirrups or porch brackets. Check the allowable platform and stirrup load ratings.
2. DO NOT alter the equipment in any way and DO NOT use in ways for which it was not intended.
3. Keep the platform level at all times.
4. Keep the equipment clean and make sure it is inspected and maintained prior to use by a competent person.
5. DO NOT use acids and keep the platform free from debris, especially oil or grease which can cause a slipping hazard.
6. NEVER take chances! If in doubt regarding the safety or use of the suspended scaffold system, consult a competent person, your supervisor and/or supplier.

Before/During Use

1. Listen for any unusual noises while traveling up and down that could indicate a problem with the stirrup alignment and/or pulleys.
2. Inspect the wire rope during ascent and descent for damage. DO NOT use wire rope that is kinked, birdcaged, corroded, undersized or damaged in any way. Always allow the wire rope to rotate freely below the hoist.
3. Always use and attach to fall protection equipment when working on suspended scaffolds, or near unprotected edges.
4. DO NOT operate the suspended platform within 10 ft of electrical power lines, unless proper precautions are taken. Consult the power service company for advice.
5. DO NOT use the platform when the wind speed exceeds 25 miles/hour (40 km/hour).

© 2026 Bee Access, LLC All Rights Reserved.

ALUMINUM WALK-THRU PORCH BRACKET

PRE-OPERATION CHECKLIST

This checklist provides general inspection guidelines concerning this component. Be aware that this checklist is not all inclusive and report any unusual findings beyond this check list.

External conditions such as misuse, abuse and long term factors such as weather, wear and fatigue, can severely weaken components to the point where they can become unsafe for use. The purpose of this checklist is to spot any defects before they become a hazard. In addition, check the instruction manuals and warning labels of all other components of the suspended scaffold system for additional information on its use and inspection procedures. Perform a thorough component check prior to each use of this equipment.

WARNING: Failure to check the equipment prior to each use can result in death or serious injury.

If you check off any boxes under "YES" or you are in doubt about any item, immediately contact your supervisor or supplier and **DO NOT** use this equipment until the problem is corrected.

YES	NO	
☐	☐	Cracked or torn welds.
☐	☐	Cracked, deformed or missing parts that could weaken the component(s).
☐	☐	Deformations that do not allow proper installation or operation
☐	☐	Missing or illegible labels.
☐	☐	Missing or defective parts.
☐	☐	Missing Quick, Hitch or Lynch Pins where applicable.
☐	☐	Penetrating rust (surface rust is acceptable). When in doubt, consult a competent person.
☐	☐	Excessive dirt and debris that interferes with installation or operation.
☐	☐	Wire rope tether for 1/2"x3.5" Hitch Pin (Item #12) connected to Porch Bracket.
☐	☐	Worn lock nuts and/or other defective or missing fastening hardware.

Inspected by: _____

Signature: _____

Date: _____

© 2026 Bee Access, LLC All Rights Reserved. Manual must be complete and read in its entirety.

ALUMINUM WALK-THRU PORCH BRACKET

LABELS

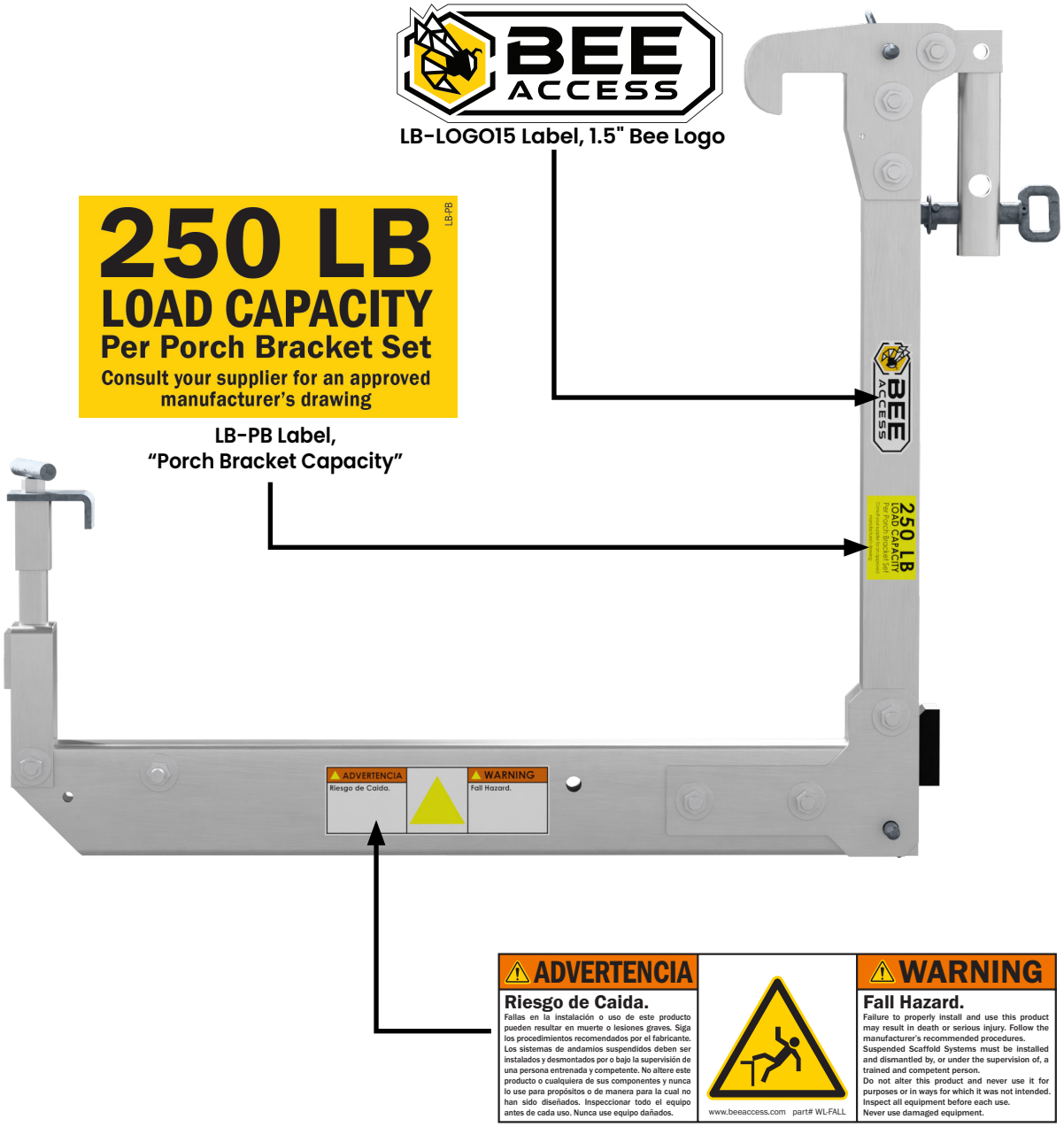

WL-FALL Label, "Warning Label, Fall Hazard"

© 2026 Bee Access, LLC All Rights Reserved.

ALUMINUM WALK-THRU PORCH BRACKET

OPTIONAL ACCESSORIES

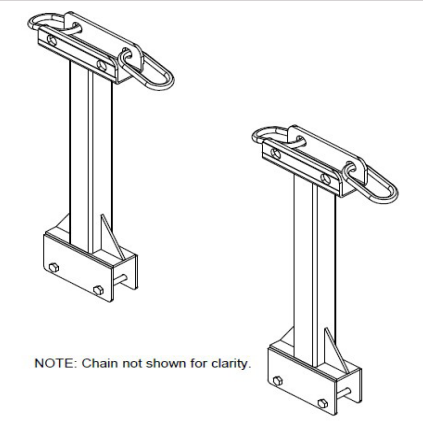

ADJUSTABLE GUARDRAIL POST SET

Part #: USAGRP-K

Dimensions: 21.55″ x 2″ x 6″ (H x D x W)

Weight: 4 lb each / 8 lb total

Construction: Aluminum

Description: The optional Adjustable Guardrail Post set provide two posts that can be installed to the midrail of the base platform on either side of the porch brackets. Each post comes with a chain (not shown) that can be connected to the adjacent base platform guardrail posts to provide adjustable guardrails on either side of the porch brackets. Installation details are shown on page 13.

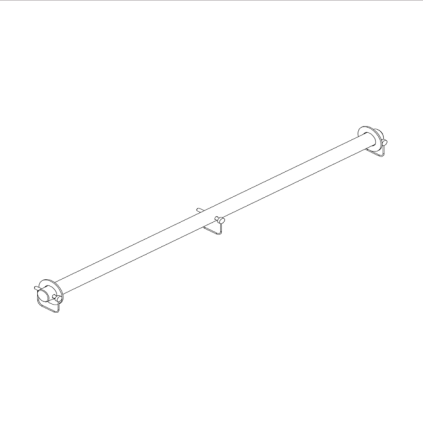

40" LONGHORN BAR

Part #: 920160

Dimensions: 40" x 1.4" (Length x Diameter)

Weight: 17 lb

Construction: Galvanized steel

Description: The Longhorn Bar can be installed to the bottom of the porch brackets to support counterweights on the outside of the platform if the platform is tilting forward more than 15 degrees from level. Install the bolt shown on page 14 to secure the longhorn bar and secure the counterweights with a pipe clamp to prevent movement. (Pipe Clamp not Included)

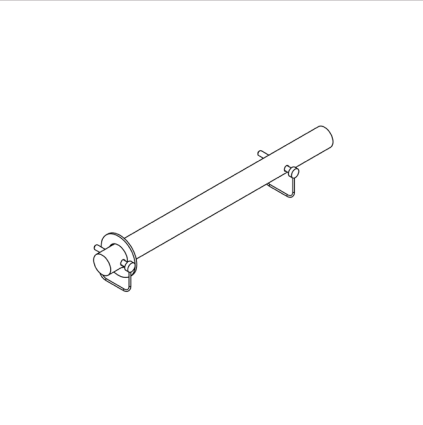

18" COUNTERWEIGHT BAR

Part #: 934178-03

Dimensions: 18" x 1.4" (Length x Diameter)

Weight: 7 lb

Construction: Galvanized steel

Description: The Counterweight Bar can be installed to the bottom of the porch brackets to support counterweights on the outside of the platform if the platform is tilting forward more than 15 degrees from level. Install the bolt shown on page 14 to secure the counterweight bar and secure the counterweights with a pipe clamp to prevent movement. (Pipe Clamp not Included)

© 2026 Bee Access, LLC All Rights Reserved.

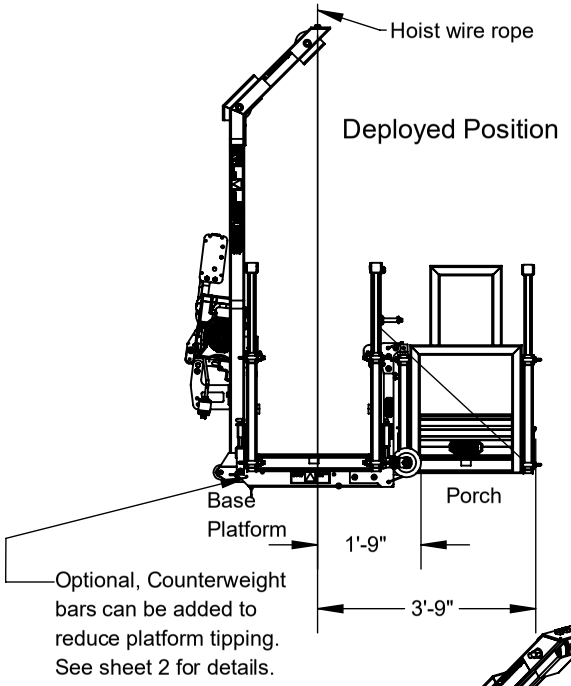

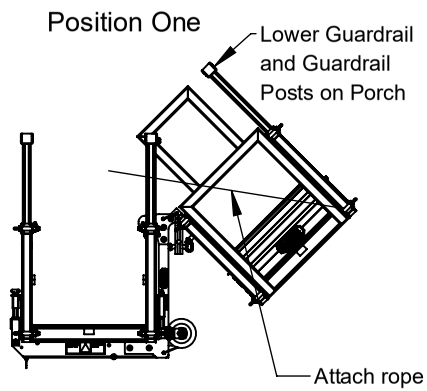

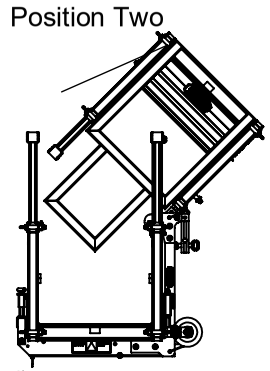

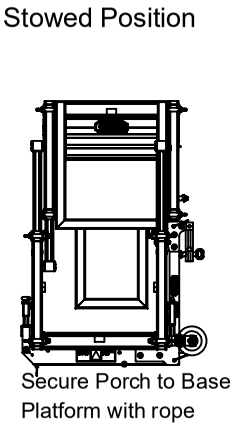

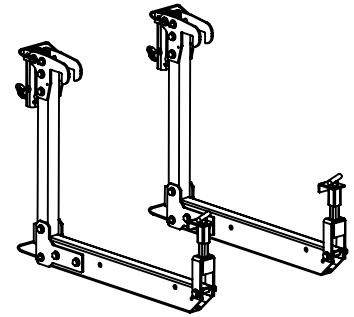

#934162: Hinging Porch Bracket Set (includes items in this view only)

NOTE:
Bracket may also be used as a standard Porch Bracket Set

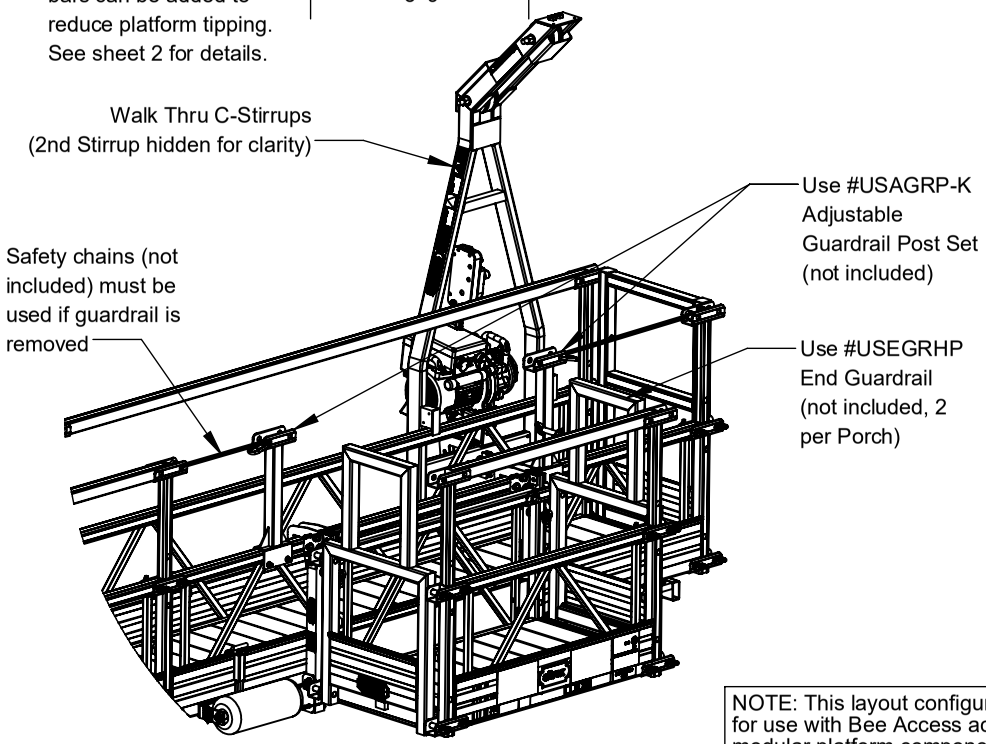

Notes:
250 lb Maximum Load Capacity per Porch

When using multiple Porches, 500 lb Maximum Load Capacity TOTAL across all Porches

When using Bracket in a hinging application, the max single Porch length is 2m

For alternate configurations contact Bee Access Products

WARNING: Total Porch length to be no more than 1/3 the Base Platform length. For alternate configurations contact Bee Access Products

Porch length (m)	Porch self weight (lb)
0.5	84
1.0	115
1.5	128
1.5 (1.0m + 0.5)	159
2.0	148

BEFORE USE: Raise platform 1-2ft and walk around platform. If the platform is unstable, Counterweights may be required. Contact Bee Access Products for verification before use

NOTE: This layout configuration is designed and approved ONLY for use with Bee Access accessories on ALTREX or UP-STAGE modular platform components. If any other components are used, Bee Access is not responsible for the platform's integrity and will take no liability for any platform failure.

WARNING: Platforms must be raised and lowered evenly to prevent crack or torn welds or other failure. Failure to do so may result in injury or death.

The information contained in this drawing is the sole property of Bee Access Products. Any reproduction in part or whole without the written permission of Bee Access Products is strictly prohibited.

Scale	Do not scale drawing.	Weight:
1:40		LBS

Approvals	By:	Date:
Drawn	ZCN	01-10-25

Aluminum Porch Bracket Set, Walk-Thru Application

Product Line/Project: **Platform**

REV. E

Part No. 934162 App

Sheet 1 of 2

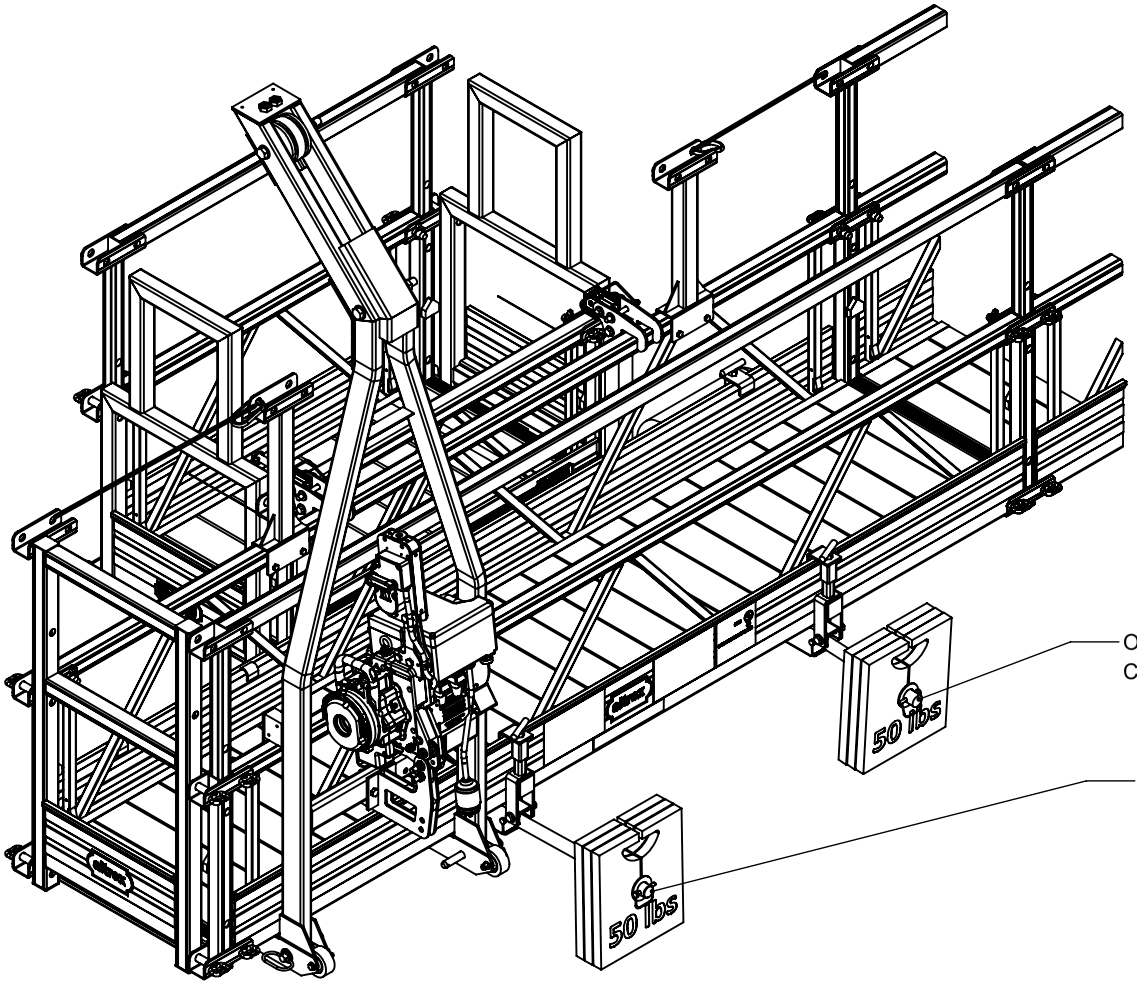

Optional #934178-30
Counterweight Bar.

Optional #920160
Longhorn Bar.

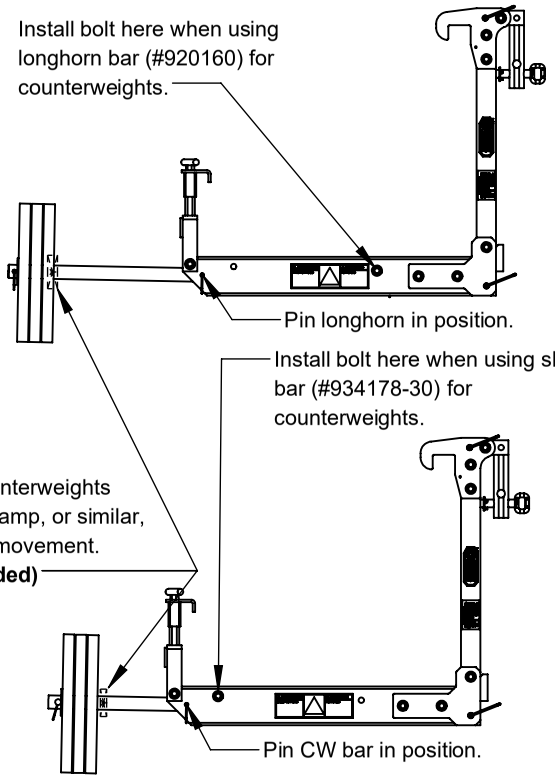

NOTE: This layout configuration is designed and approved ONLY for use with Bee Access accessories on ALTREX or UP-STAGE modular platform components. If any other components are used, Bee Access is not responsible for the platform's integrity and will take no liability for any platform failure.

WARNING: Platforms must be raised and lowered evenly to prevent crack or torn welds or other failure. Failure to do so may result in injury or death.

The information contained in this drawing is the sole property of Bee Access Products. Any reproduction in part or whole without the written permission of Bee Access Products is strictly prohibited.

Scale	Do not scale drawing.	Weight:
1:20		LBS

Approvals	By:	Date:
Drawn	ZCN	01-10-25

BEE ACCESS

Aluminum Porch Bracket Set, Walk-Thru Application

Product Line/Project: **Platform**

REV. E

Part No. 934162 App

Sheet 2 of 2